ALMEC MECHATRONICS

SPN5M RTC | CONTROLLER with Real Time Clock

The SPN5M controller is an ECU (Electronic Control Unit) which can handle up to 16 inputs and up to 16 outputs.
The device is supplied with an integrated battery for real-time clock

Easy to program, using the ALMEClab development platform, it can be implemented in a serial line (RS232) or in a CAN network, as MASTER or SLAVE.

The polyurethane resin case makes the controllers suitable for use on machines that operate in harsh work environments.

CE CiA

ALMEC LAB

TECHNICAL FEATURES	
MASTER CODE	SPN5M.308
POWER SUPPLY	9-36 VDC / CURRENT CONSUMPTION 30 mA @ 24 VDC (STAND BY MODE)
INPUT	**TOTAL No. 16 INPUTS**, SOFTWARE CONFIGURABLE AS: • UP TO 16 DIGITAL INPUTS (HIGH SIDE) • UP TO 4 DIGITAL INPUTS (LOW SIDE) • UP TO 14 ANALOGIC INPUTS (0~40V) • UP TO 4 ANALOGIC INPUTS (4~20mA) • UP TO 2 FREQUENCY INPUTS (1~1000Hz)
OUTPUT	**TOTAL No. 16 OUTPUTS,** SOFTWARE CONFIGURABLE AS: • UP TO 8 PWM HIGH SIDE OUTPUTS • UP TO 16 HIGH SIDE OUTPUTS (MAX 2A FOR EACH OUTPUT PIN) → MAX TOTAL HIGH SIDE OUTPUTS CURRENT 10 A) • UP TO 4 DIGITAL LOW SIDE OUTPUT (MAX 500mA FOR EACH OUTPUT PIN) • UP TO 4 DIGITAL LOW SIDE OUTPUT (MAX 30mA FOR EACH OUTPUT PIN)
CAN BUS	No. 2 PORTS: 2.0B COMPLIANT - (11, 29 BIT) - ISO 11898 - UP TO 1MBIT/S
CAN BUS PROTOCOLS	CAN OPEN (CIA DS401 DEVICE PROFILE FOR GENERIC I/O MODULE, WITH DS306 EDS FILE) ON REQUEST: SAE J1939 - FMS
SERIAL	No. 1 PORT: RS232
RTC	Internal buffer battery for real-time clock (time and date) keeping up to 10 year
CONNECTION *See «MATING CONNECTORS» table*	MOLEX 48 PIN
CASE	PUR - UL94-V0
PROTECTION	IP68
WORKING TEMPERATURE	-40°C +85°C

Scan me

ALMEC S.p.A. - Via Torino 196 - 12063 - Dogliani (Cn)
P.IVA/C.F./Reg.Imp.: 02834380046 - Cap. Soc. € 323.400 - Tel. +39 0173 742821 - www.almec.net - info@almec.net

ELECTRONIC FEATURES

SLAVE USAGE	EDS FILE
MASTER USAGE	ALMEClab C PROGRAM OPEN SOURCE SOFTWARE
PROGRAMMING	FIRMWARE UPLOAD BY CAN BUS WITH ALOADER SOFTWARE TOOL
CYCLE TIME	Less than 2 ms
CPU	FAMILY: ARM CORTEX M4, 32BIT CORE
INTERNAL MEMORY	FLASH (PROGRAM MEMORY): 1MB RAM MEMORY: 256KB EEPROM: 128KB

STANDARDS

DIRECTIVE	2014/30/EU (EMC)
ELECTROMAGNETIC COMPATIBILITY	EN 50498
ELECTROMAGNETIC EMISSIONS	EN 61000-6-4
ELECTROMAGNETIC IMMUNITY	EN 61000-6-2
ROAD VEHICLES ELECTRICAL DISTURBANCES FROM CONDUCTION AND COUPLING — PART 2	ISO 7637-2: 2011
ROAD VEHICLES COMPONENT TEST METHODS FOR ELECTRICAL DISTURBANCES FROM NARROWBAND RADIATED ELECTROMAGNETIC ENERGY — PART 1	ISO 11452-1: 2005
PERFORMANCE AND SAFETY INTEGRITY LEVEL	PLc – SIL1 (SINGLE-CHANNEL INTERNAL SCHEME)

SIZE (mm)

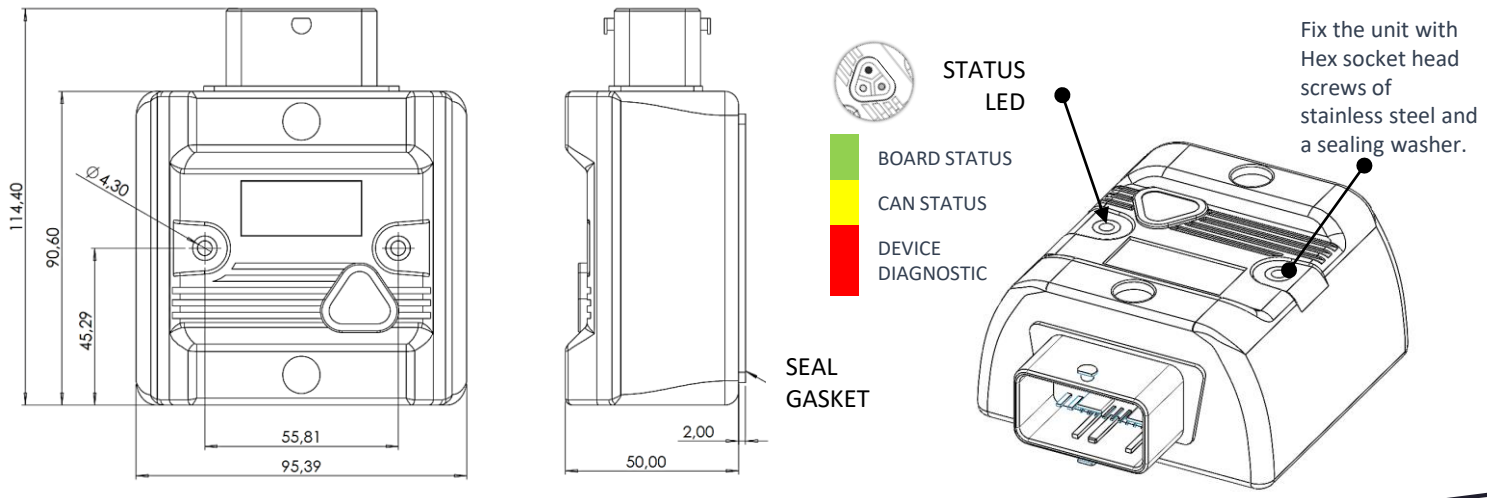

ALMEC S.p.A. - Via Torino 196 - 12063 - Dogliani (Cn)
P.IVA/C.F./Reg.Imp.: 02834380046 - Cap. Soc. € 323.400 - Tel. +39 0173 742821 - www.almec.net - info@almec.net

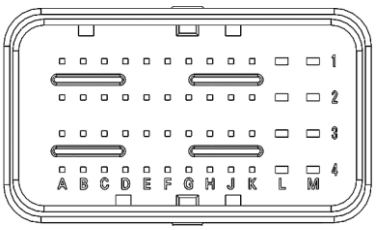

48 PINS CONNECTOR PINOUT TABLE

PIN	A	B	C	D	E	F	G	H	J	K	L	M
1	DIGITAL / PWM OUTPUT 13	SUPPLY OUTPUTS 9…16	DIGITAL / PWM OUTPUT 12	DIGITAL / PWM OUTPUT 11	DIGITAL / PWM OUTPUT 10	DIGITAL / PWM OUTPUT 9	GND POWER SUPPLY	DIGITAL OUTPUT 8	DIGITAL OUTPUT 7	DIGITAL OUTPUT 6	SUPPLY OUTPUTS 1…8	DIGITAL OUTPUT 4
2	DIGITAL / PWM OUTPUT 14	INPUT 9 0…40Vdc/ DIGITAL	INPUT 8 0…40Vdc/ DIGITAL	INPUT 7 0…40Vdc/ DIGITAL	INPUT 6 4…20mA / 0…40Vdc/ DIGITAL	INPUT 5 4…20mA / 0…40Vdc/ DIGITAL	INPUT 4 4…20mA / 0…40Vdc/ DIGITAL	INPUT 3 4…20mA/ 0…40Vdc/ DIGITAL	INPUT 2 0…40Vdc/ DIGITAL	INPUT 1 0…40Vdc/ DIGITAL	DIGITAL OUTPUT 5	DIGITAL OUTPUT 3
			DIGITAL LS OUTPUT 8 500 mA	DIGITAL LS OUTPUT 7 500 mA	DIGITAL LS OUTPUT 6 30 mA	DIGITAL LS OUTPUT 5 30 mA	DIGITAL LS OUTPUT 4 30 mA	DIGITAL LS OUTPUT 3 30 mA	DIGITAL LS OUTPUT 2 500 mA	DIGITAL LS OUTPUT 1 500 mA		
3	DIGITAL / PWM OUTPUT 15	INPUT 10 0…40Vdc/ DIGITAL	FREQ / DIGITAL INPUT 11	FREQ / DIGITAL INPUT 12	INPUT 13 0…40Vdc/ DIGITAL	INPUT 14 0…40Vdc/ DIGITAL	INPUT 15 0…40Vdc/ DIGITAL	INPUT 16 0…40Vdc/ DIGITAL	RS232 RX / CAN2 H *	RS232 TX / CAN2 L *	GND POWER SUPPLY	DIGITAL OUTPUT2/ CAN2 L *
4	DIGITAL / PWM OUTPUT 16	SENSOR POWER SUPPLY	SENSOR POWER SUPPLY	SENSOR POWER SUPPLY	GND	GND	GND	CAN H	CAN L	MODULE POWER SUPPLY	GND	DIGITAL OUTPUT1/ CAN2 H *

NOTES:
- «FREQ» means «frequency» - «LS» MEANS «LOW SIDE»
- For digital low side outputs : **low side can't be used if the relative input is used**
- (*) : pin shared with different functions, see the pin configuration based on hardware configuration table
- Sensor power pins have the reference power supply voltage, MAX 200mA
- GND pins are connected togheder

TERMINAL WIRE SIZE: follow the manufacturer's mating connector specification
- from A1 to J4: 0.75 mm²
- from L1 to M4: 2.0 mm²

HARDWARE CONFIGURATION

S01	Nr. 2 CAN PORTS (2° on pins: J3 – K3)
S02	Nr. 1 CAN PORT Nr. 1 RS232 PORT (on pins: J3 – K3)
S03	Nr. 2 CAN PORT (2° on pins: M3 – M4) Nr. 1 RS232 PORT (on pins: J3 – K3)

MATING CONNECTORS – MOLEX CODES

CONNECTOR	64320-3311
TERMINALS	64323-1029 (x8) 64322-1029 (x40)
WIRE CAP	64320-1301
ALMEC PRE-WIRED CONNECTOR	CNN.ML.48P.R.VD.CB (red cable) CNN.ML.48P.B.VD.CB (blue cable)

64320-3311

64323-1029

64322-1029

64320-1301

CNN.ML.48P.R.VD.CB
CNN.ML.48P.B.VD.CB

ALMEC S.p.A. - Via Torino 196 - 12063 - Dogliani (Cn)
P.IVA/C.F./Reg.Imp.: 02834380046 - Cap. Soc. € 323.400 - Tel. +39 0173 742821 - www.almec.net - info@almec.net

NOTE